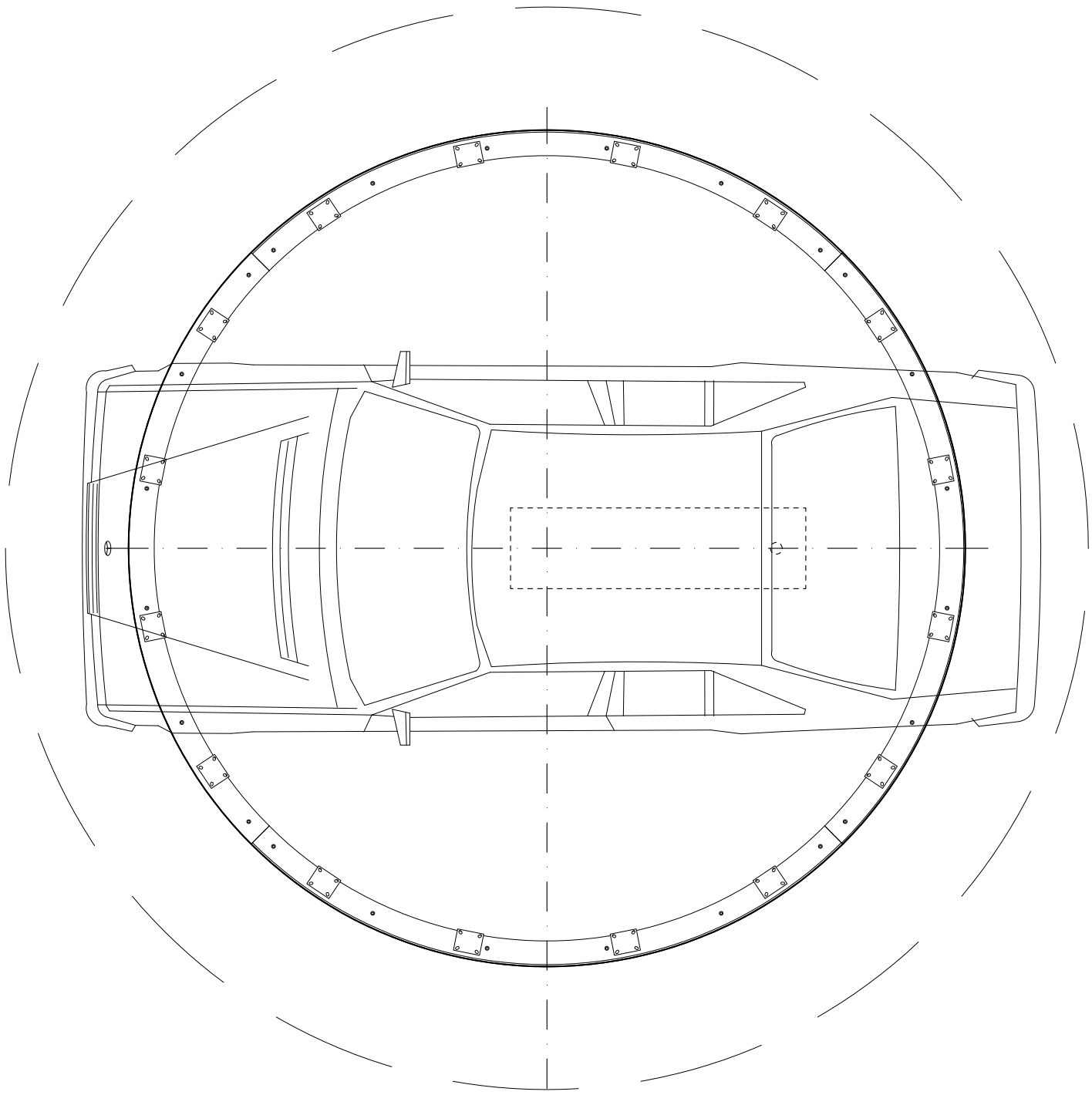

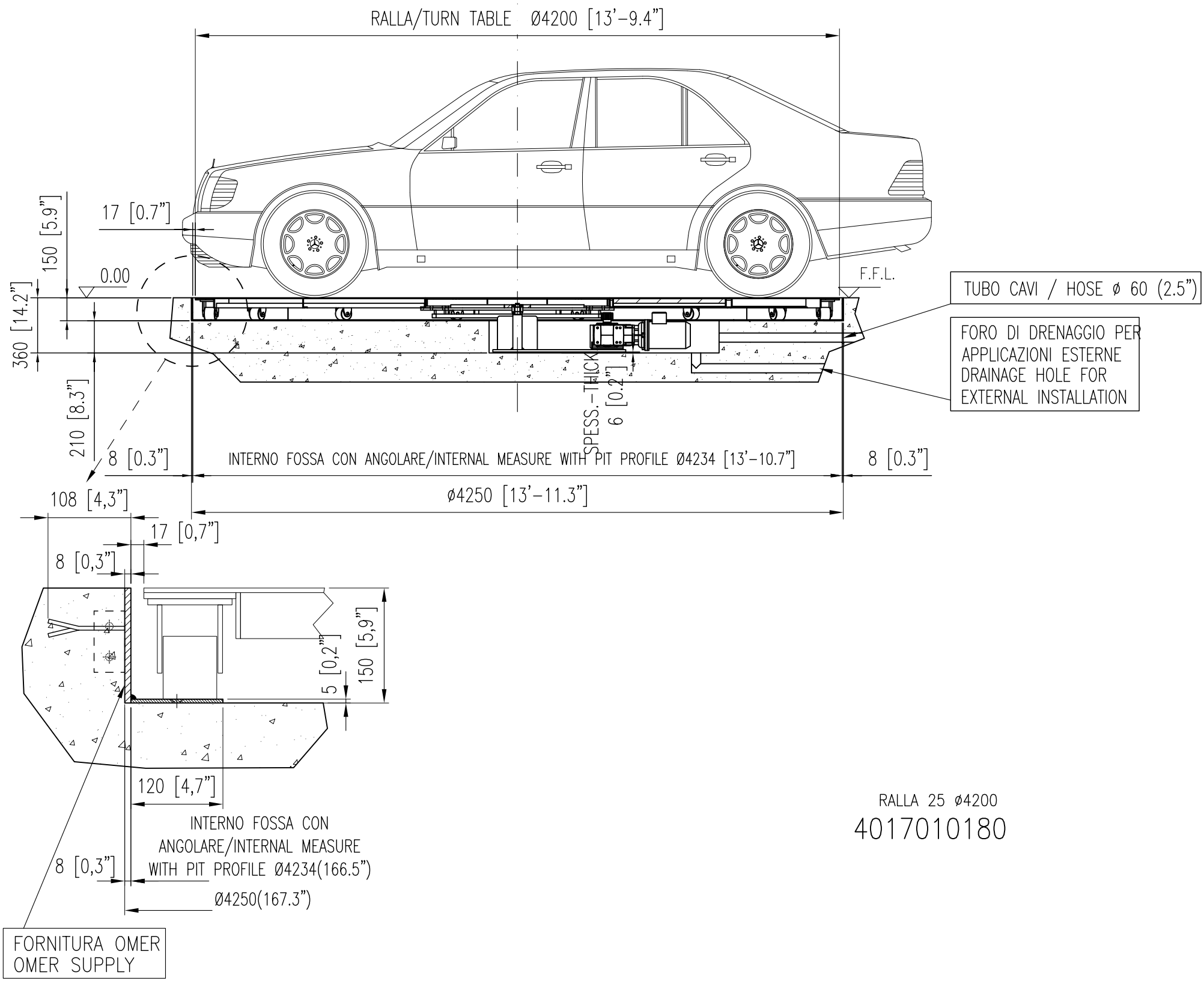

RALLA 25 ø4200

4017010180